LONG SEAMS	
COURSE	ORIENTATION
1(TOP)	270°
2	275°

*VERT – TOP TO BOTTOM

*NOTE: ALL ELEVATIONS ARE PULLED FROM WELD SEAM FOR EASE OF FABRICATION

NOTE 7: X-RAY: SPOT X-RAY PER CODE

Ship loose items:
(2 PCs) Swing gate (A71-24 (GALV.))
(2 PCs) Ladders w/ Hardware
(2 PCs.) Roof Handrail w/ Hardware
(1 PC) Roof Platform w/ Hardware
(1 PC.) Rest Platform w/ Hardware
(2 PCs.) Rest platform Handrail w/ Hardware

NOTE:
SUPPORT LEGS BASE PLATE HOLES TO BE DRILLED BY CUSTOMER.
DIP PIPE FOR NOZZLE D BY CUSTOMER.

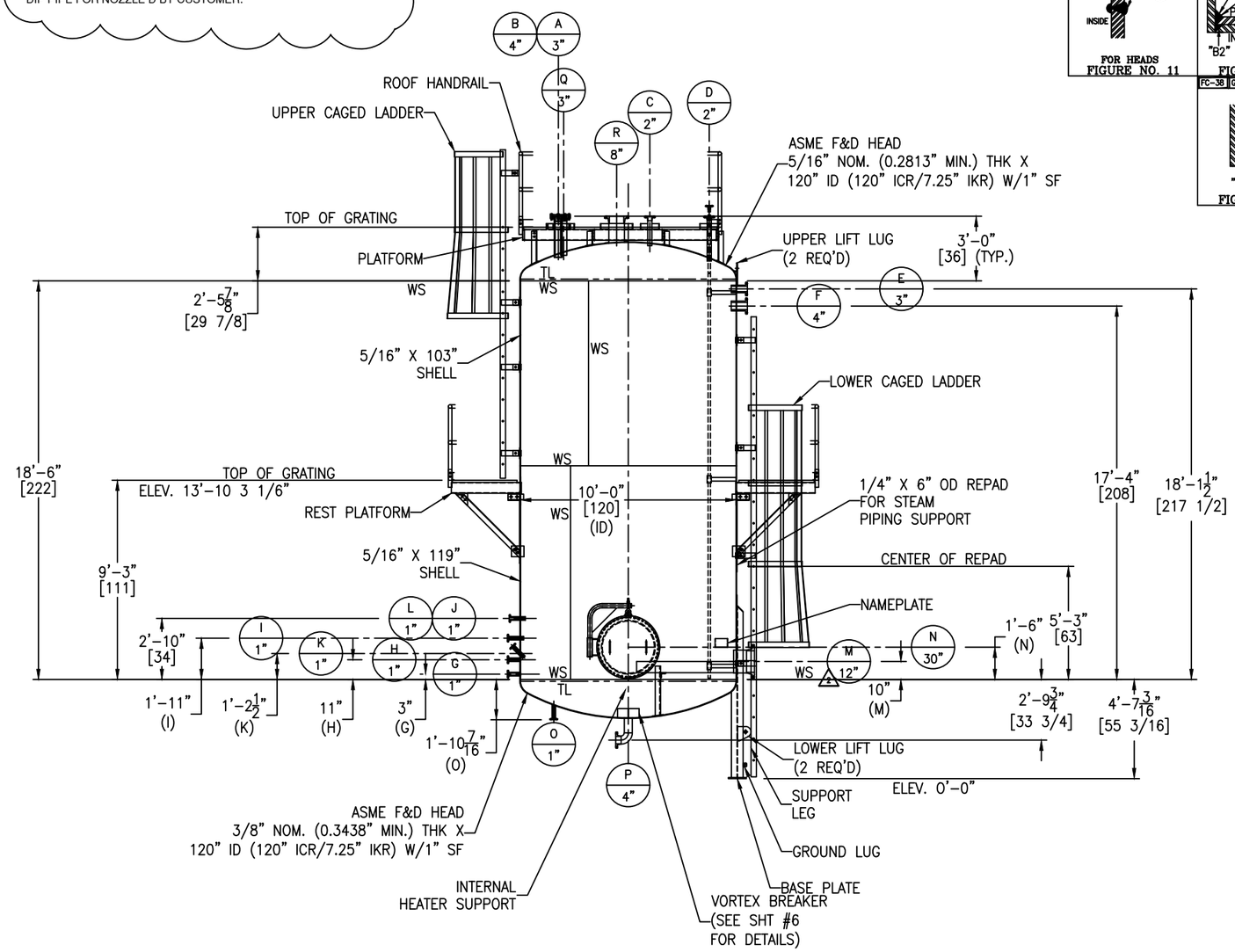

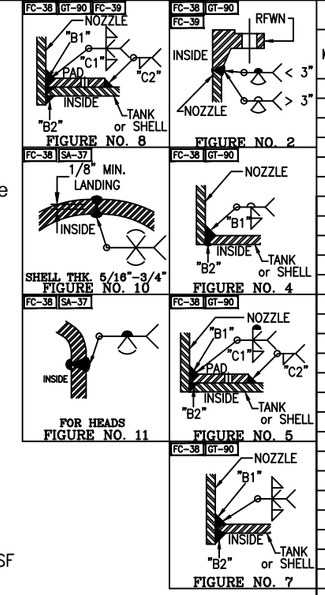

NOZZLE SCHEDULE

MARK	SERVICE	SIZE	RATING	TYPE / STYLE	NECK SCHED.	PROJECTION EXT. (℄)	PROJECTION INT. (MIN.)	WELD FIGURE	REPAD SIZE (WIDTH X THK.)	WELD SIZE "A1"	"A2"	"B1"	"B2"	"C1"	"C2"
A	RADAR	3"	150#	RFWN	40	SEE DWG	1"	2,7	–	–	–	3/16	1/8	–	–
B	SPARE	4"	150#	RFWN W/ BLIND	80	SEE DWG	1"	2,7	–	–	–	1/4	1/8	–	–
C	NITROGEN	2"	150#	RFWN	40	SEE DWG	1"	2,7	–	–	–	3/16	1/8	–	–
D	INSTRUMENT	2"	150#	RFWN	40	SEE DWG	1"	2,7	–	–	–	3/6	1/8	–	–
E	EQUALIZATION	3"	150#	RFLWN	–	6"	1"	7	–	–	–	3/16	1/8	–	–
F	INLET	4"	150#	RFLWN	–	6"	1"	7	–	–	–	1/4	1/8	–	–
G	SAMPLE	1"	150#	RFLWN	–	7"	–	4	–	–	–	3/16	1/8	–	–
H	SAMPLE	1"	150#	RFLWN	–	7"	–	4	–	–	–	3/16	1/8	–	–
I	SAMPLE	1"	150#	RFLWN	–	7"	1"	7	–	–	–	3/16	1/8	–	–
J	INSTRUMENT	1"	150#	RFLWN	–	6"	1"	7	–	–	–	3/16	1/8	–	–
K	INSTRUMENT	1"	150#	RFLWN	–	6"	1"	7	–	–	–	3/16	1/8	–	–
L	INSTRUMENT	1"	150#	RFLWN	–	6"	1"	7	–	–	–	3/16	1/8	–	–
M	HEATER	12"	150#	RFWN	40	10"	2 1"	2,8	2" X 3/16"	–	–	1/4	1/8	3/16	3/16
N	MANWAY	30"	150#	RFWN W/DAVIT	1/2"	9"	1"	2,8	2 1/2" X 1/2"	–	–	3/8	1/8	1/2	1/4
O	–	1"	150#	RFLWN	–	SEE DWG	–	4	–	–	–	3/16	1/8	–	–
P	OUTLET	4"	150#	RFWN W/ELBOW	80	SEE DWG	–	2,4	–	–	–	1/4	1/8	–	–
Q	SPARE	3"	150#	RFWN W/BLIND	40	SEE DWG	1"	2,7	–	–	–	3/16	1/8	–	–
R	VENT	8"	150#	RFWN	40	SEE DWG	–	2,5	2" X 3/16"	–	–	3/16	1/8	3/16	3/16

MATERIALS OF CONSTRUCTION

	VESSEL
SHELL	SA516-70
HEADS	SA516-70
NOZZLE M NECK	SA106-B SMLS
OTHER NOZZLE NECKS	SA106-B SMLS & SA234 WPB
NOZZLE FLANGES	SA105
MANWAY NECKS	SA516-70
MANWAY FLANGES	SA105
MANWAY GASKETS	2 GARLOCK 9900
NOZZLE GASKETS	2 GARLOCK GRAPHONIC
BOLTS/STUDS	SA193-B7 (ZINC PLATED)
NUTS	SA914-2H (ZINC PLATED)
EXTERNAL REPADS	SA36
INTERNAL REPADS	SA516-70
SUPPORTS/HOLD DOWNS	SA36
VORTEX BREAKER	SA516-70
LIFTING LUGS	SA36
NOZZLE SUPPORTS	SA516-70
NOZZLE GRATING OPENINGS	SA36
GROUND LUG	SA36
HEATER SUPPORT	SA36
LADDER	SA36
TANK CLIPS (LADDER)	SA36
HANDRAIL	SA500
HANDRAIL CLIPS	SA36
PLATFORM	SA500 (GALV.)
PLATFORM CLIPS	SA36
PLATFORM SUPPORT	SA36
DIPTUBE SUPPORT	2 SA36 & SA53B-ERW
JACKET NOZZLE FLANGES	–

DESIGN DATA

	VESSEL
DESIGN AND FAB. CODE	ASME
CERT. STAMP REQ'D.	YES
DESIGN PRESSURE	15 PSIG/ -1 PSIG
DESIGN TEMPERATURE	400° F
MIN. DESIGN METAL TEMP.	0° F @ 15 PSIG
OPERATING PRESSURE	15 PSIG
OPERATING TEMPERATURE	400° F
JOINT EFFICIENCY HEADS	0.85
JOINT EFFICIENCY SHELL	0.85
CORROSION ALLOWANCE	1/8" (SHELL & HEADS ONLY)
SPECIFIC GRAVITY	1.0
EARTHQUAKE ZONE	Ss = (0.092) S1 = (0.058)
WIND LOAD	140 MPH
STRESS RELIEF	NOT REQ'D
RADIOGRAPHIC EXAM	SPOT (SEE NOTE 7)
DYE PENETRANT EXAM	NOT REQ'D
MAGNETIC PARTICLE EXAM	NOT REQ'D
HYDROSTATIC TEST	NOT REQ'D
PNEUMATIC TEST	17 PSIG/ GAUGE#11
JKT DESIGN AND FAB. CODE	–
JKT CERT. STAMP REQ'D.	–
JKT DESIGN PRESSURE	–
JKT DESIGN TEMPERATURE	–
JKT MIN. DESIGN METAL TEMP.	–
JKT OPERATING PRESSURE	–
JKT OPERATING TEMPERATURE	–
JKT JOINT EFFICIENCY HEADS	–
JKT JOINT EFFICIENCY SHELL	–
JKT HYDRO TEST	–

VESSEL FINISH

INTERIOR WELD TREATMENT:	SAV TANK STANDARD
EXTERIOR WELD TREATMENT:	SAV TANK STANDARD
SAV TANK FINISHING STANDARD:	N/A
INSULATION:	N/A
PAINTING:	SEE NOTE 8
GALVANIZING:	SEE NOTE 9

VESSEL CAPACITY AND WEIGHTS

OPERATING CAPACITY	–
FULL CAPACITY	12,100 GAL.
EMPTY SHIPPING WEIGHT W/O ACCESSORIES	14,000 LBS.
WEIGHT FULL OF WATER	118,800 LBS.
WEIGHT FULL OF PRODUCT	118,800 LBS.
WEIGHT OF ACCESSORIES	3,200 LBS.

ASME SECT. VIII, DIV. 1
2023 EDITION

ENG. _____ DATE: _____
Q.C. _____ DATE: _____
A.I. _____ DATE: _____

This drawing is issued for customer approval. please review, make approval changes (if any) in red. check the appropriate box, sign & date.

- ☐ Approval – no changes. Please proceed with fabrication.
- ☐ Approved as noted. Please proceed with fabrication
- ☐ Not approved. Please make changes and resubmit.

Customer signature _____ Date _____

GENERAL NOTES

1.) COVER ALL FLANGES, OPENINGS & MACHINED SURFACES PRIOR TO SHIPMENT UNLESS OTHERWISE NOTED.
2.) BOLT HOLES TO STRADDLE 0° & 180° UNLESS OTHERWISE NOTED.
3.) REPADS TO HAVE (1) ø1/4" NPT TELL-TALE HOLES FOR PNEUMATIC TESTING AT 2 PSIG FOR PRESSURE RETAINING PARTS. ALL OTHER REPADS TO HAVE (1) ø1/4" WEEP HOLE AT LOWEST POINT ON PAD.
4.) ASME CODE VESSELS TO BE IN ACCORDANCE WITH UG-80 & UG-81. TOLERANCES: +/- 1/8" FOR DIMENSIONS AND +/- 2 DEGREES FOR ORIENTATIONS.
5.) ASME MATERIALS TO CONFORM TO THE FOLLOWING: FLANGES – B16.5, FITTINGS – B16.9 & COUPLINGS – B16.11.
7.) X-RAY: SPOT X-RAY PER CODE
8.) PAINTING – INTERIOR WILL BE SANDBLASTED AND PAINTED (2) COATS CHEMLINE 784 @ 6-8 MILS DFT, EXTERIOR TO BE SANDBLASTED AND PAINTED (1) COAT PRIME COAT INTERBOND 2340 @ 4-5 MILS DFT AND (1) TOP COAT MASCOAT INDUSTRIAL AT 20 MILS DFT
9.) GALVANIZING: LADDERS, HANDRAILS, PLATFORMS, & GRATING TO BE HOT-DIPPED GALVANIZED

REVISIONS

REV	D.BY	C.BY	DATE	DESCRIPTION
				AS BUILT
3	RS	NP	7/29/25	CERTIFIED
2	RS	NP	7/18/25	APPROVAL REV 2
1	RS	AD	7/2/25	APPROVAL REV 1
0	AD	RS	5/28/25	APPROVAL

Savannah Tank & Equipment Corp.
1517 Telfair Road, Savannah, GA 31415
(912) 233-8902

DRAWN BY: AD
CHK'D BY: RS
APPROVED BY: NP
SCALE: 1/4" = 1'-0"

KRATON CHEMICAL LLC
SKIM OIL TANK
EQUIP. #
CUST. PO #4500337009

DRAWING NO.: 052-25-1 SHT 1 OF 11 REV. SET 3

LONG SEAMS

COURSE	ORIENTATION
1(TOP)	270°
2	275°

*VERT – TOP TO BOTTOM

Ship loose items:

(2 PCs) Swing gate (A71-24 (GALV.))
(2 PCs) Ladders w/ Hardware
(2 PCs.) Roof Handrail w/ Hardware
(1 PC) Roof Platform w/ Hardware
(1 PC.) Rest Platform w/ Hardware
(2 PCs.) Rest platform Handrail w/ Hardware

NOTE:
SUPPORT LEGS BASE PLATE HOLES TO BE DRILLED BY CUSTOMER.
DIP PIPE FOR NOZZLE D BY CUSTOMER.

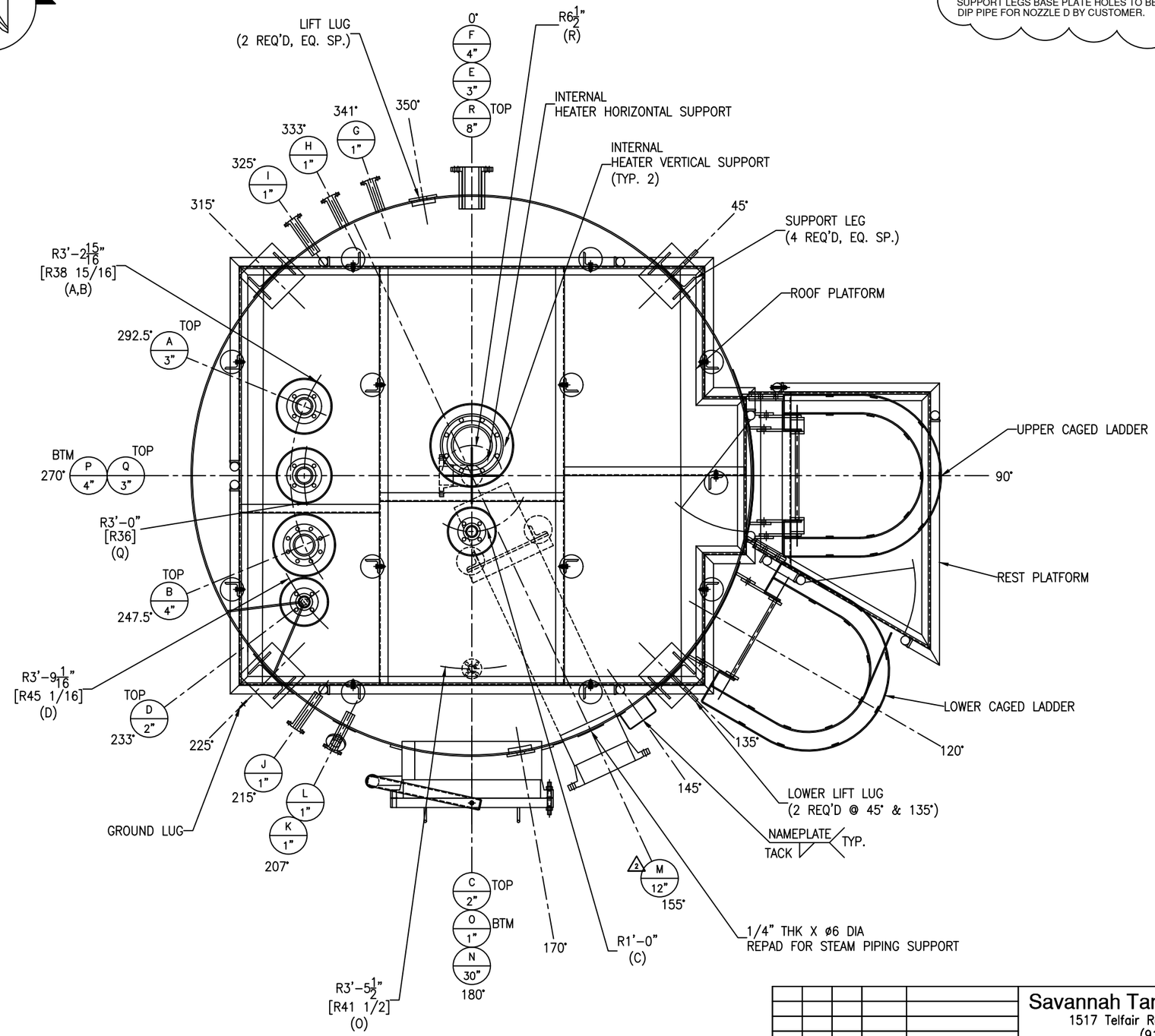

REV	D.BY	C.BY	DATE	DESCRIPTION
				AS BUILT
3	RS	NP	7/29/25	CERTIFIED
2	RS	NP	7/18/25	APPROVAL REV 1
1	RS	AD	7/2/25	APPROVAL REV 1
0	AD	RS	5/28/25	APPROVAL

1 REVISIONS

Savannah Tank & Equipment Corp.
1517 Telfair Road, Savannah, GA 31415
(912) 233-8902

DRAWN BY: AD
CHK'D BY: RS
APPROVED BY: NP
SCALE: 3/4" = 1'-0"

KRATON CHEMICAL LLC
SKIM OIL TANK
EQUIP. #
CUST. PO #4500337009

DRAWING NO.: 052-25-2 SHT 2 OF 11 REV. SET 3

*HOLES IN THE BASE PLATE TO BE FIELD CUT.

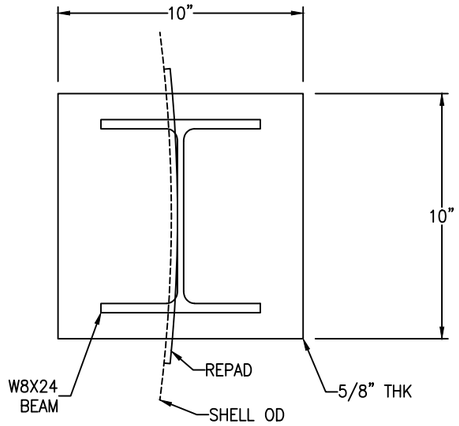

BASE PLATE DETAIL

(4 REQ'D) SCALE: 3" = 1'-0"

FC-38

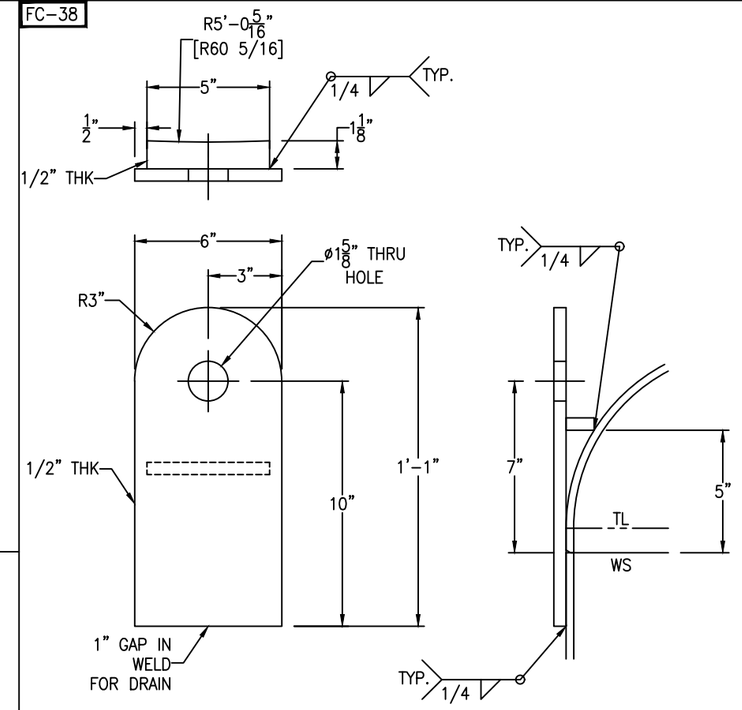

TANK WT. <= 20000#
SHACKLE PIN DIA. = 1 1/2"

UPPER LIFT LUG DETAIL

(2 REQ'D) SCALE: 3" = 1'-0"

FC-38

*G.L. IS LOCATED ON SUPPORT LEG @225°.

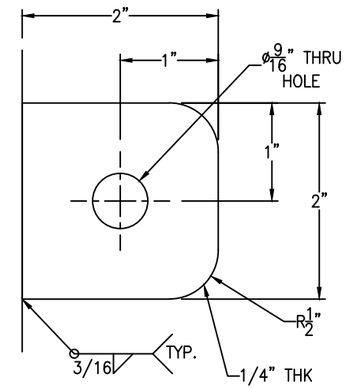

GROUND LUG DETAIL

(1 REQ'D) SCALE: 1'-0" = 1'-0"

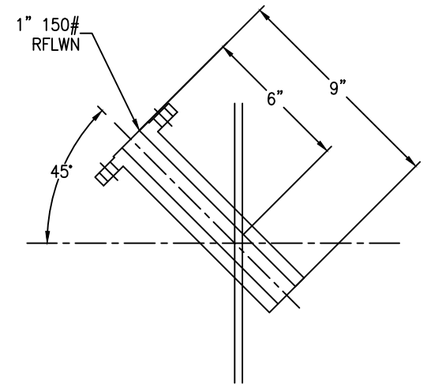

NOZZLE K DETAIL

SCALE: 3" = 1'-0"

FC-38

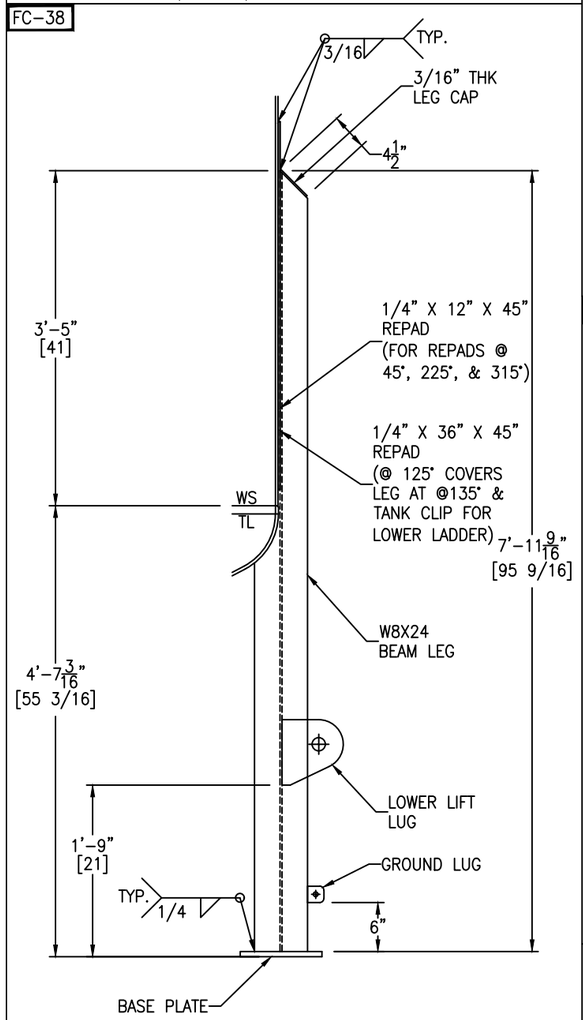

SUPPORT LEG DETAIL

(4 REQ'D) SCALE: 1" = 1'-0"

FC-38

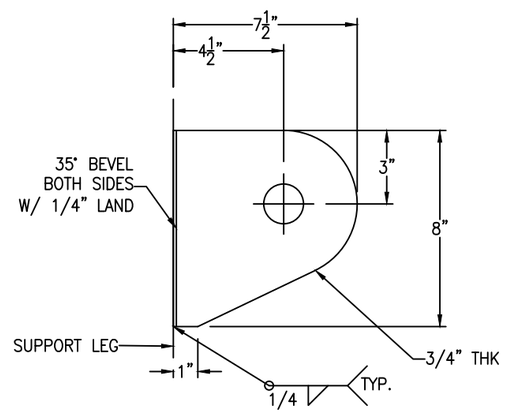

LOWER LIFT LUG IS LOCATED ON SUPPORT LEGS @ 45° & 135°

LOWER LIFT LUG DETAIL

(2 REQ'D) SCALE: 3" = 1'-0"

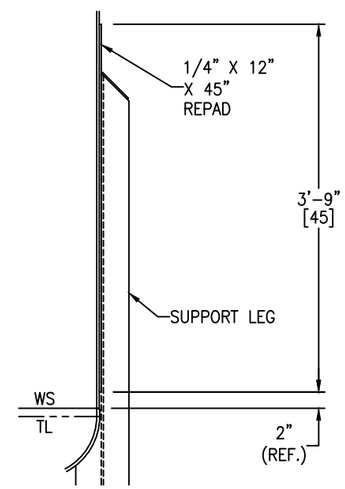

LEG REPAD DETAIL

(3 REQ'D) SCALE: 1" = 1'-0"

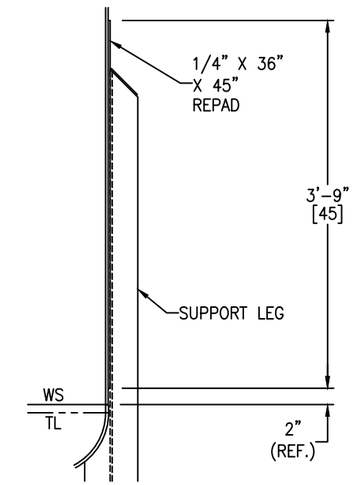

CENTER OF REPAD @ 125°
SEE SHEET #8 FOR DETAIL

REPAD FOR LEG AT 135°

(1 REQ'D) SCALE: 1" = 1'-0"

Bolting for blinds

Q: (4) 5/8"-11 NC x 3" HH BOLT
(4) 5/8"-11 NC HH NUT
(1) 3" 150# RING GASKET X 1/8" THK

B: (8) 5/8"-11 NC x 3" HH BOLT
(8) 5/8"-11 NC HH NUT
(1) 4" 150# RING GASKET X 1/8" THK

REV	D.BY	C.BY	DATE	DESCRIPTION
				AS BUILT
3	RS	NP	7/29/25	CERTIFIED
2	RS	NP	7/18/25	APPROVAL REV 2
1	RS	AD	7/2/25	APPROVAL REV 1
0	AD	RS	5/28/25	APPROVAL

1 REVISIONS

Savannah Tank & Equipment Corp.
1517 Telfair Road, Savannah, GA 31415
(912) 233-8902

DRAWN BY: AD
CHK'D BY: RS
APPROVED BY: NP
SCALE: 1/4" = 1'-0"

KRATON CHEMICAL LLC
SKIM OIL TANK
EQUIP. #
CUST. PO #4500337009

DRAWING NO.: 052-25-3 SHT 3 OF 11 REV. SET 3

CUSTOMER TO USE EXISTING 1" DIP PIPE.
Provided support for 1" dip pipe.

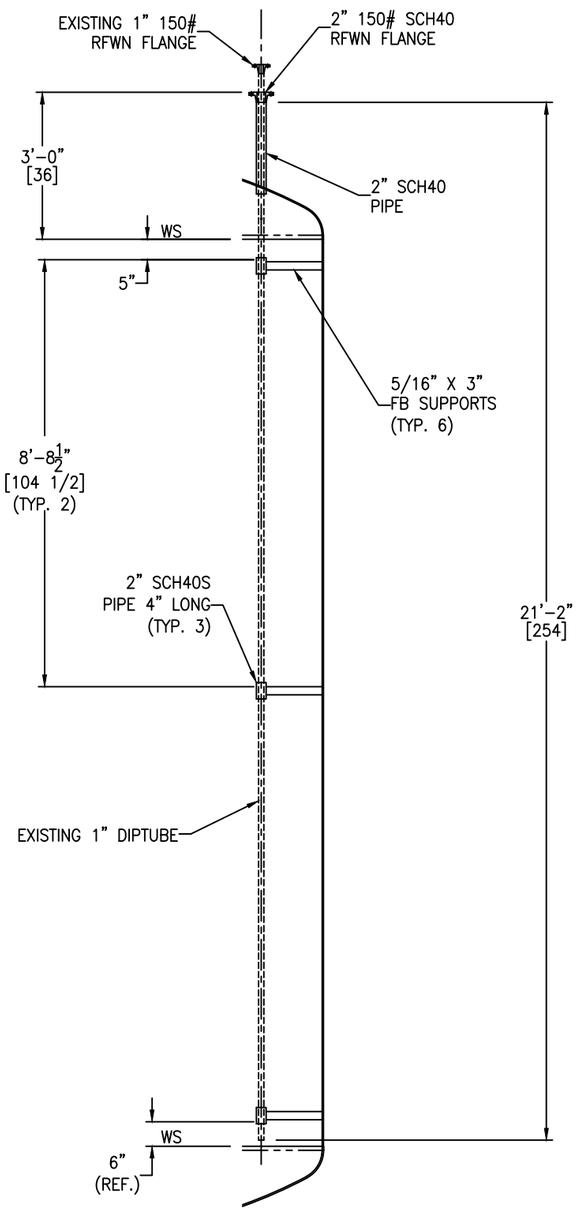

2 NOZZLE D DETAIL

SCALE: 1/2" = 1'-0"

FC-38

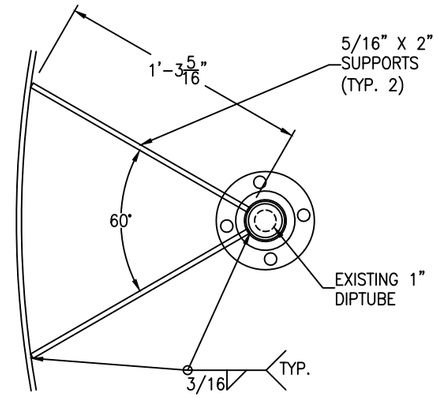

2 EXISTING PIPE SUPPORT DETAIL

(3 REQ'D) SCALE: 2" = 1'-0"

FC-38

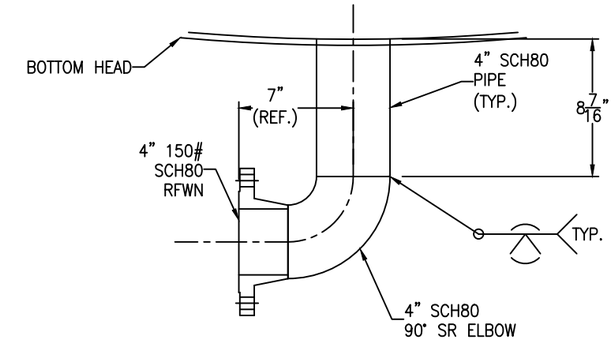

NOZZLE P DETAIL

SCALE: 2" = 1'-0"

FC-38

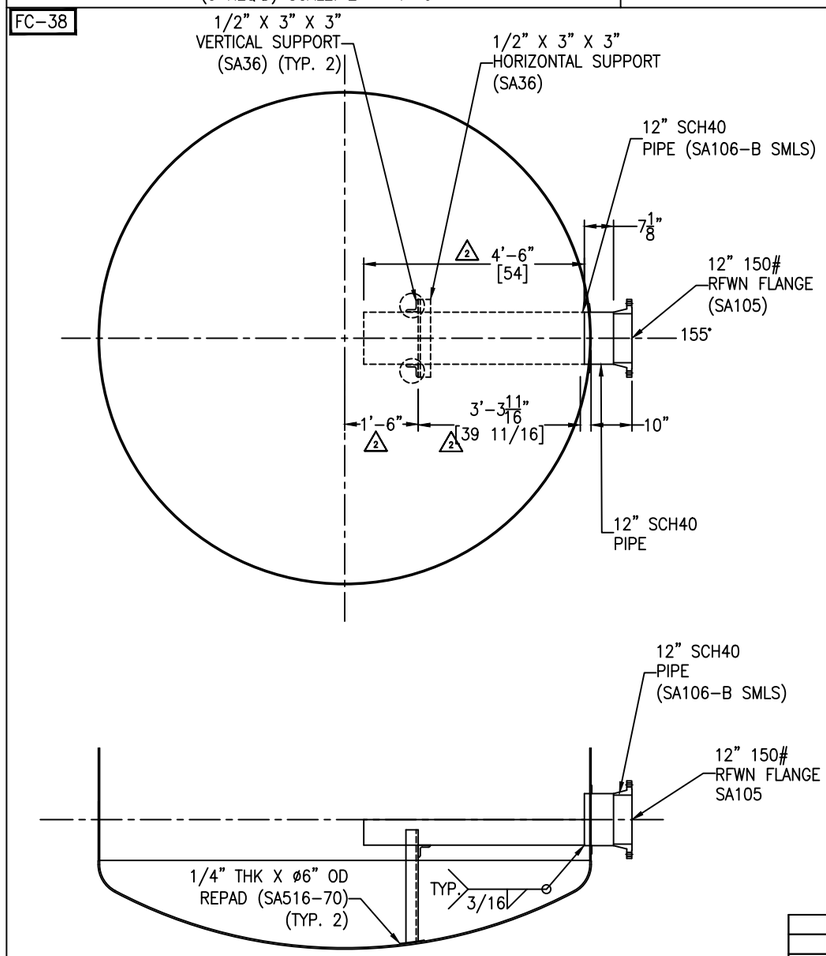

LOWER 180° HALF ONLY FOR PIPE INSIDE THE TANK

2 NOZZLE M DETAIL

SCALE: 1/2" = 1'-0"

FC-38

*DOUBLE CHECK CORRECT LOCATION OF THE HORIZONTAL SUPPORT.
*ID OF THE ROLLED PLATE TO MATCH THE ID OF THE 12" PIPE.

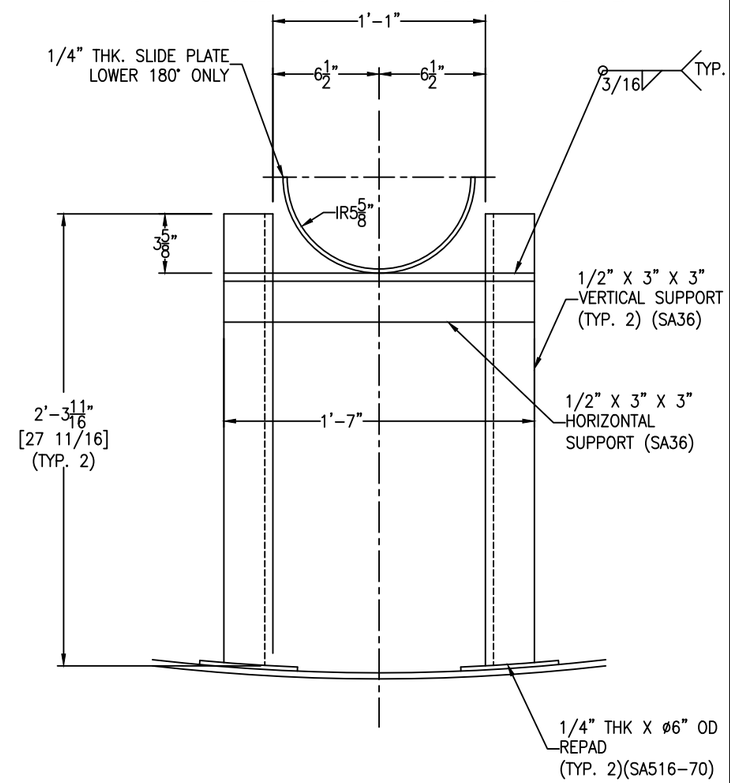

2 NOZZLE M PIPE SUPPORT DETAIL

SCALE: 2" = 1'-0"

REV	D.BY	C.BY	DATE	DESCRIPTION
				AS BUILT
3	RS	NP	7/29/25	CERTIFIED
2	RS	NP	7/18/25	APPROVAL REV 2
1	RS	AD	7/2/25	APPROVAL REV 1
0	AD	RS	5/28/25	APPROVAL

1 REVISIONS

Savannah Tank & Equipment Corp.
1517 Telfair Road, Savannah, GA 31415
(912) 233-8902

DRAWN BY: AD
CHK'D BY: RS
APPROVED BY: NP
SCALE: 1/4" = 1'-0"

KRATON CHEMICAL LLC
SKIM OIL TANK
EQUIP. #
CUST. PO #4500337009

DRAWING NO.: 052-25-4 SHT 4 OF 11 REV. SET 3

GM-73

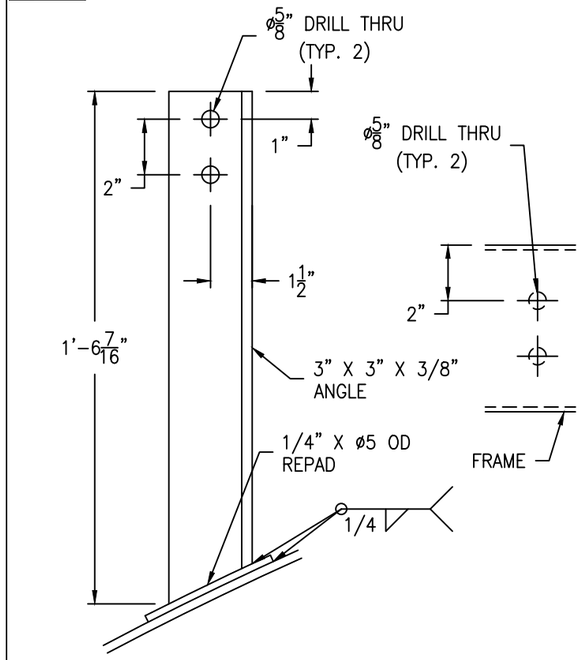

*NOTE: ADJUST CLIP LENGTH DURING FABRICATION

*NOTE: CUT CLIP TO MATCH HEAD.

FRAME SUPPORT DETAIL

(13 REQ'D) SCALE: 3" = 1'-0"

GM-73

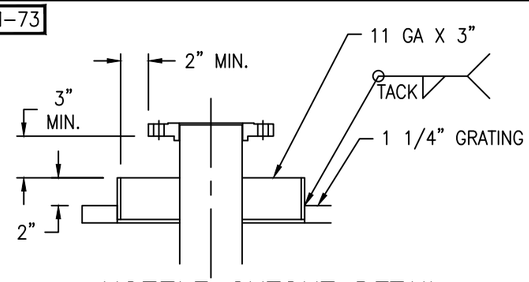

NOZZLE CUTOUT DETAIL

(6 REQ'D) SCALE: 1 1/2" = 1'-0"

FC-38

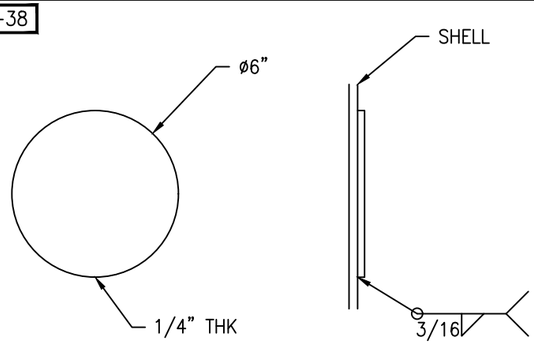

STEAM PIPING SUPPORT REPAD

SCALE: 3" = 1'-0"

GM-73

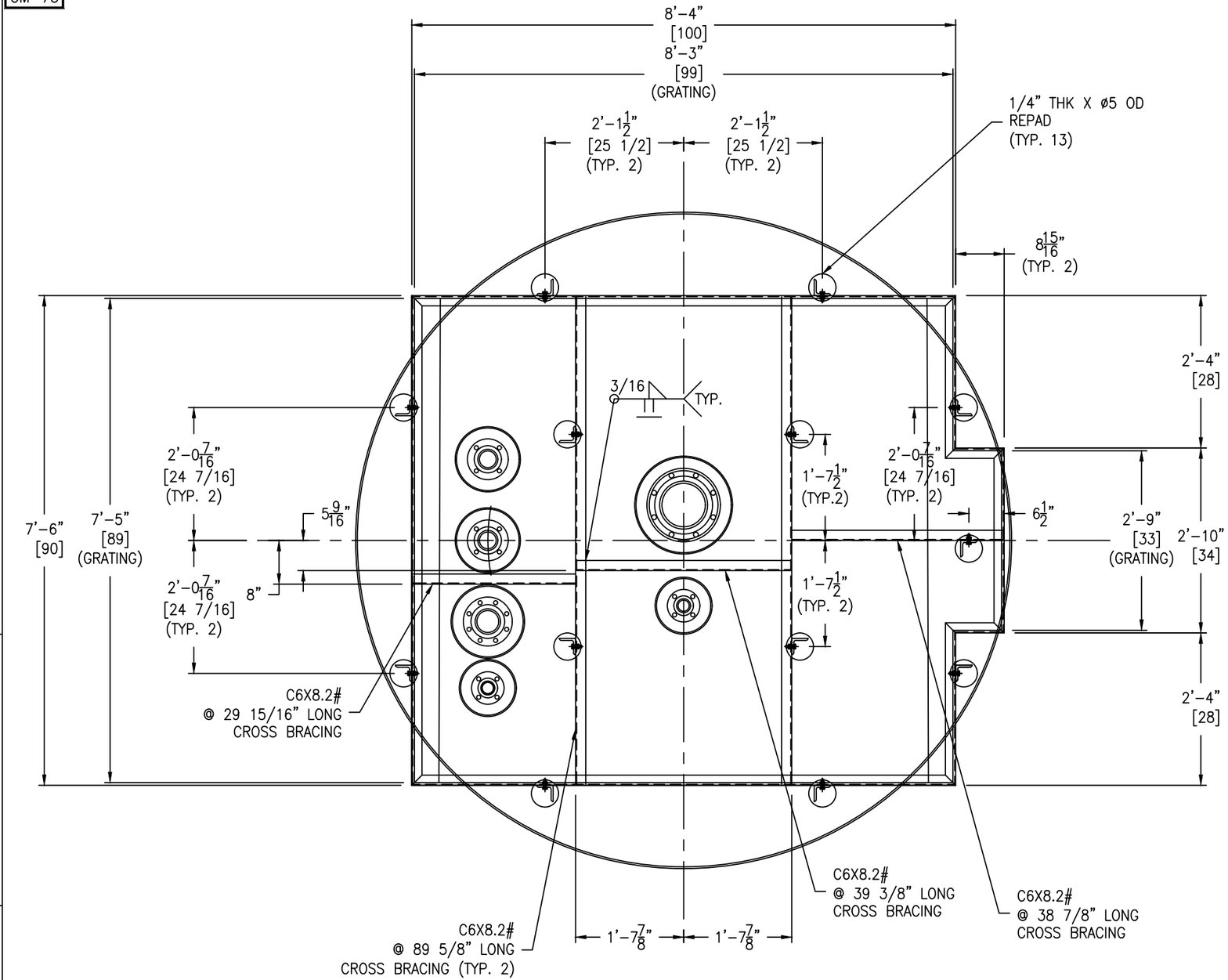

ROOF PALTFORM DETAIL

SCALE: 3/4" = 1'-0"

FRAME SUPPORT BOLTING:
(26) 1/2-13 NC X 2" HH BOLT - SA193-B7 (ZINC PLATED)
(26) 1/2-13 NC HH NUT - SA194-2H (ZIINC PLATED)

PLATFORM TO BE HOT-DIPPED GALVANIZED

REV	D.BY	C.BY	DATE	DESCRIPTION
				AS BUILT
3	RS	NP	7/29/25	CERTIFIED
2	RS	NP	7/18/25	APPROVAL REV 2
1	RS	AD	7/2/25	APPROVAL REV 1
0	AD	RS	5/28/25	APPROVAL

⚠1 REVISIONS

Savannah Tank & Equipment Corp.
1517 Telfair Road, Savannah, GA 31415
(912) 233-8902

DRAWN BY: AD
CHK'D BY: RS
APPROVED BY: NP
SCALE: 3/8" = 1'-0"

KRATON CHEMICAL LLC
SKIM OIL TANK
EQUIP. #
CUST. PO #4500337009

DRAWING NO.: 052-25-5 SHT 5 OF 11 REV. SET 3

GM-73

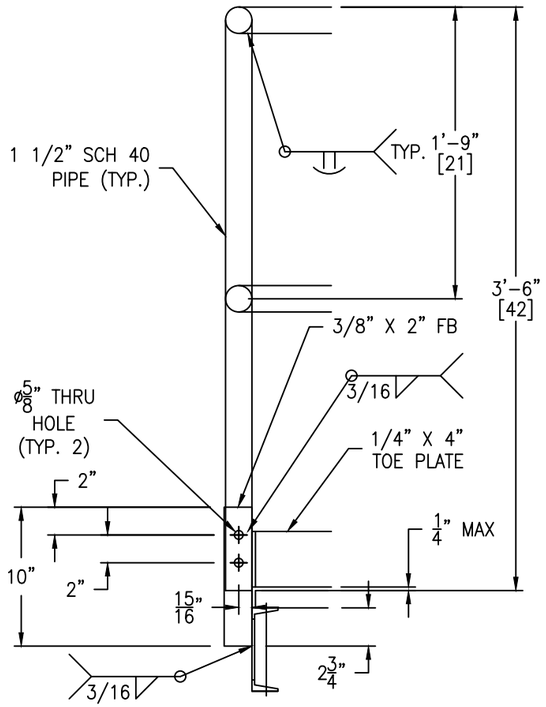

HANDRAIL POST DETAIL

(8 REQ'D) SCALE: 1 1/2" = 1'-0"

FC-38

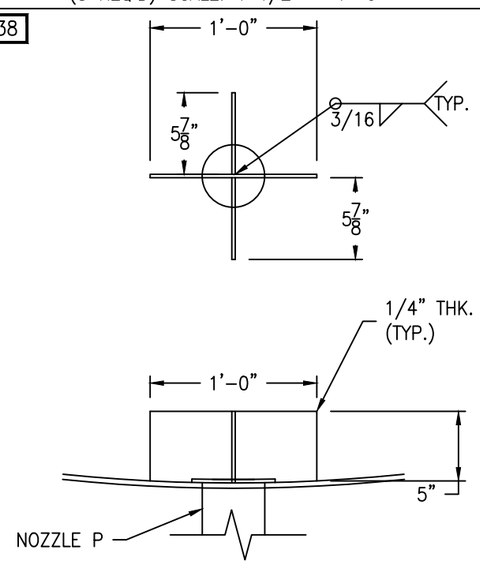

VORTEX BREAKER DETAIL

SCALE: 1 1/2" = 1'-0"

HANDRAIL BOLTING:
(16) 1/2-13 NC X 3" HH BOLT - SA193-B7 (ZINC PLATED)
(16) 1/2-13 NC HH NUT - SA194-2H (ZINC PLATED)

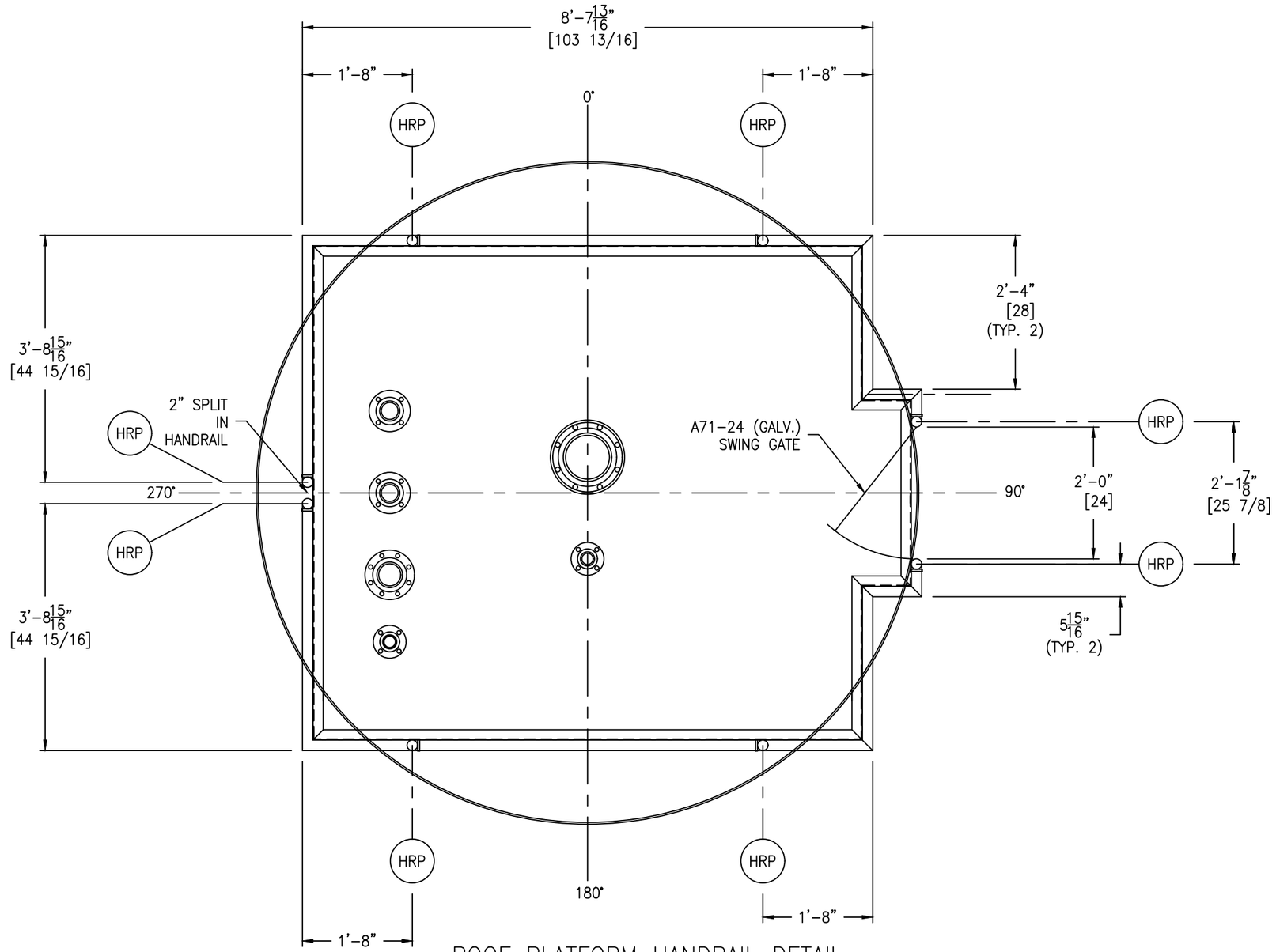

ROOF PLATFORM HANDRAIL DETAIL

SCALE: 3/4" = 1'-0"

HANDRAIL TO BE HOT-DIPPED GALVANIZED

REV	D.BY	C.BY	DATE	DESCRIPTION
				AS BUILT
3	RS	NP	7/29/25	CERTIFIED
2	RS	NP	7/18/25	APPROVAL REV 2
1	RS	AD	7/2/25	APPROVAL REV 1
0	AD	RS	5/28/25	APPROVAL

⚠1 REVISIONS

Savannah Tank & Equipment Corp.
1517 Telfair Road, Savannah, GA 31415
(912) 233-8902

DRAWN BY: AD
CHK'D BY: RS
APPROVED BY: NP
SCALE: 3/8" = 1'-0"

KRATON CHEMICAL LLC
SKIM OIL TANK
EQUIP. #
CUST. PO #4500337009

DRAWING NO.: 052-25-6 SHT 6 OF 11 REV. SET 3

LADDER CLIP BOLTING:
(8) 5/8-11 NC X 2" HH BOLT - SA193-B7 (ZINC PLATED)
(8) 5/8-11 NC HH NUT - SA194-2H (ZINC PLATED)

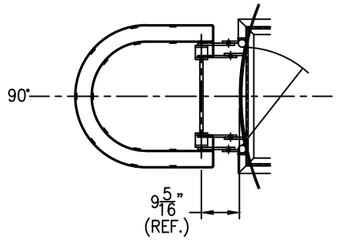

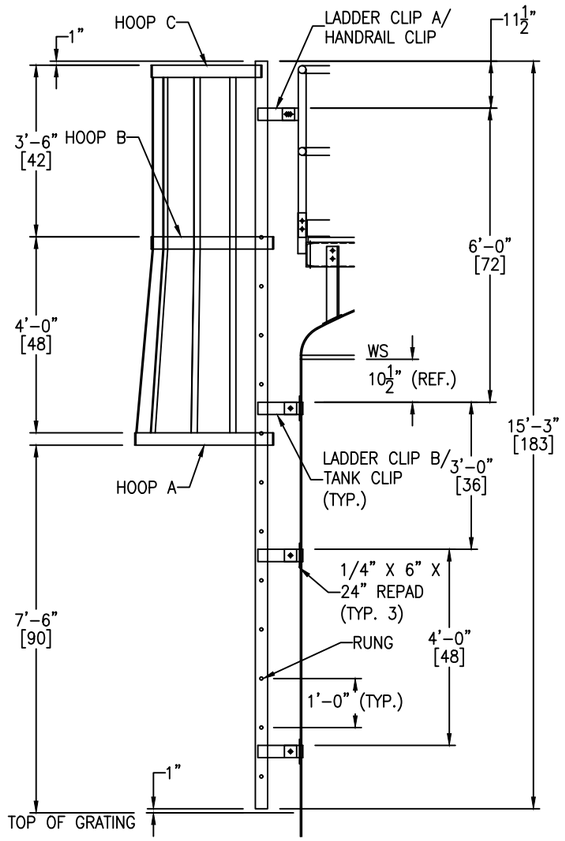

UPPER LADDER DETAIL

SCALE: 1/2" = 1'-0"

GM-73

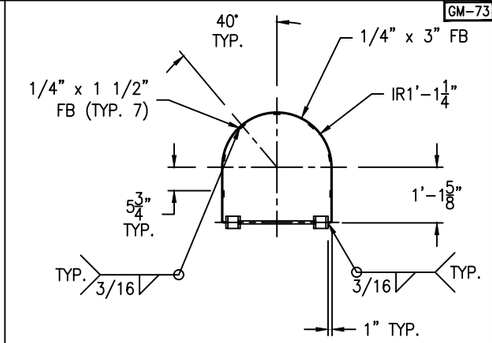

HOOP "C" DETAIL

(1 REQ'D) SCALE: 1/2" = 1'-0"

GM-73

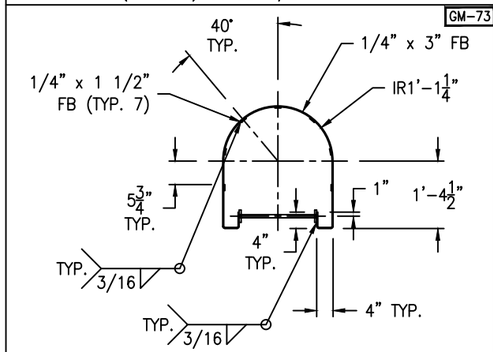

HOOP "B" DETAIL

(1 REQ'D) SCALE: 1/2" = 1'-0"

GM-73

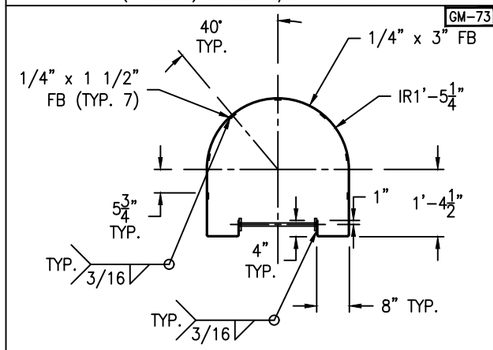

HOOP "A" DETAIL

(1 REQ'D) SCALE: 1/2" = 1'-0"

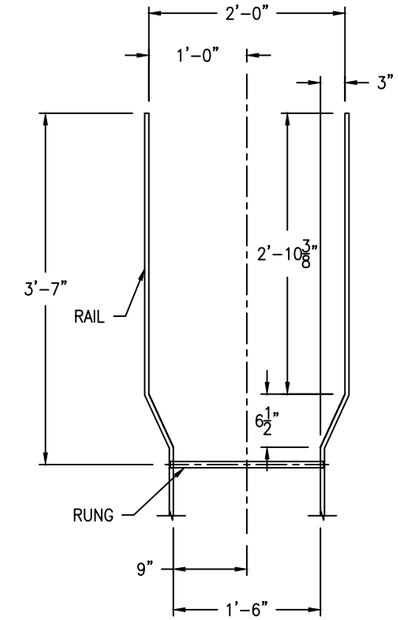

WALK-THRU DETAIL

SCALE: 1" = 1'-0"

GM-73

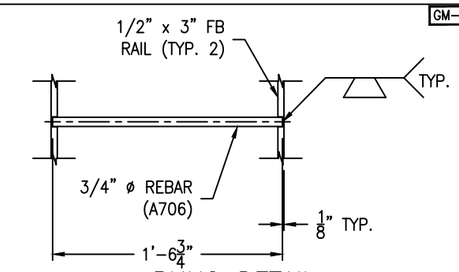

RUNG DETAIL

(12 REQ'D) SCALE: 1 1/2" = 1'-0"

GM-73

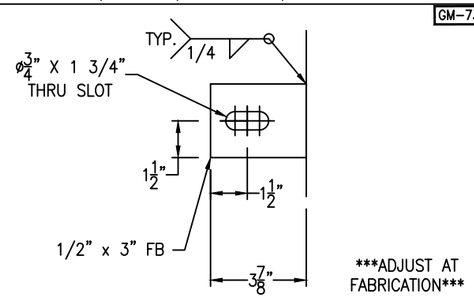

HANDRIAL CLIP DETAIL

(2 REQ'D) SCALE: 3" = 1'-0"

GM-73

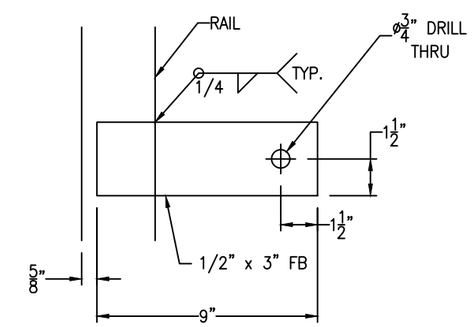

LADDER CLIP A DETAIL

(2 REQ'D) SCALE: 3" = 1'-0"

GM-73

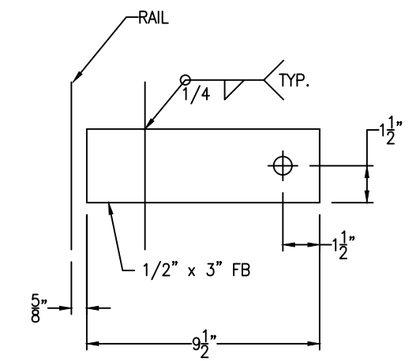

LADDER CLIP B DETAIL

(6 REQ'D) SCALE: 3" = 1'-0"

FC-38

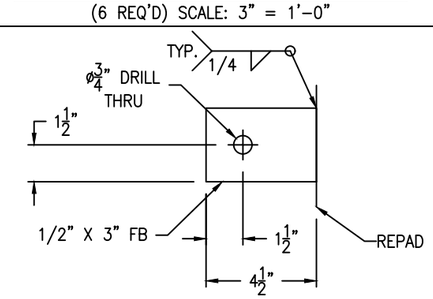

TANK CLIP B DETAIL

(6 REQ'D) SCALE: 3" = 1'-0"

FC-38

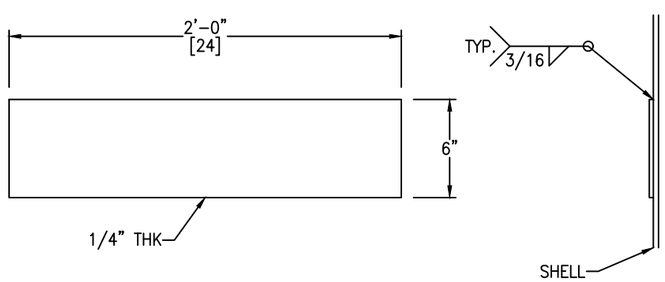

TANK CLIP REPAD DETAIL

(3 REQ'D) SCALE: 2" = 1'-0"

LADDER TO BE HOT-DIPPED GALVANIZED

REV	D.BY	C.BY	DATE	DESCRIPTION
				AS BUILT
3	RS	NP	7/29/25	CERTIFIED
2	RS	AD	7/18/25	APPROVAL REV 2
1	RS	AD	7/2/25	APPROVAL REV 1
0	AD	RS	5/28/25	APPROVAL

⚠ REVISIONS

Savannah Tank & Equipment Corp.
1517 Telfair Road, Savannah, GA 31415
(912) 233-8902

DRAWN BY: AD
CHK'D BY: RS
APPROVED BY: NP
SCALE: 1/4" = 1'-0"

KRATON CHEMICAL LLC
SKIM OIL TANK
EQUIP. #
CUST. PO #4500337009

DRAWING NO.: 052-25-7 SHT 7 OF 11 REV. SET 3

LADDER CLIP BOLTING:
(8) 5/8-11 NC X 2" HH BOLT - SA193-B7 (ZINC PLATED)
(8) 5/8-11 NC HH NUT - SA194-2H (ZINC PLATED)

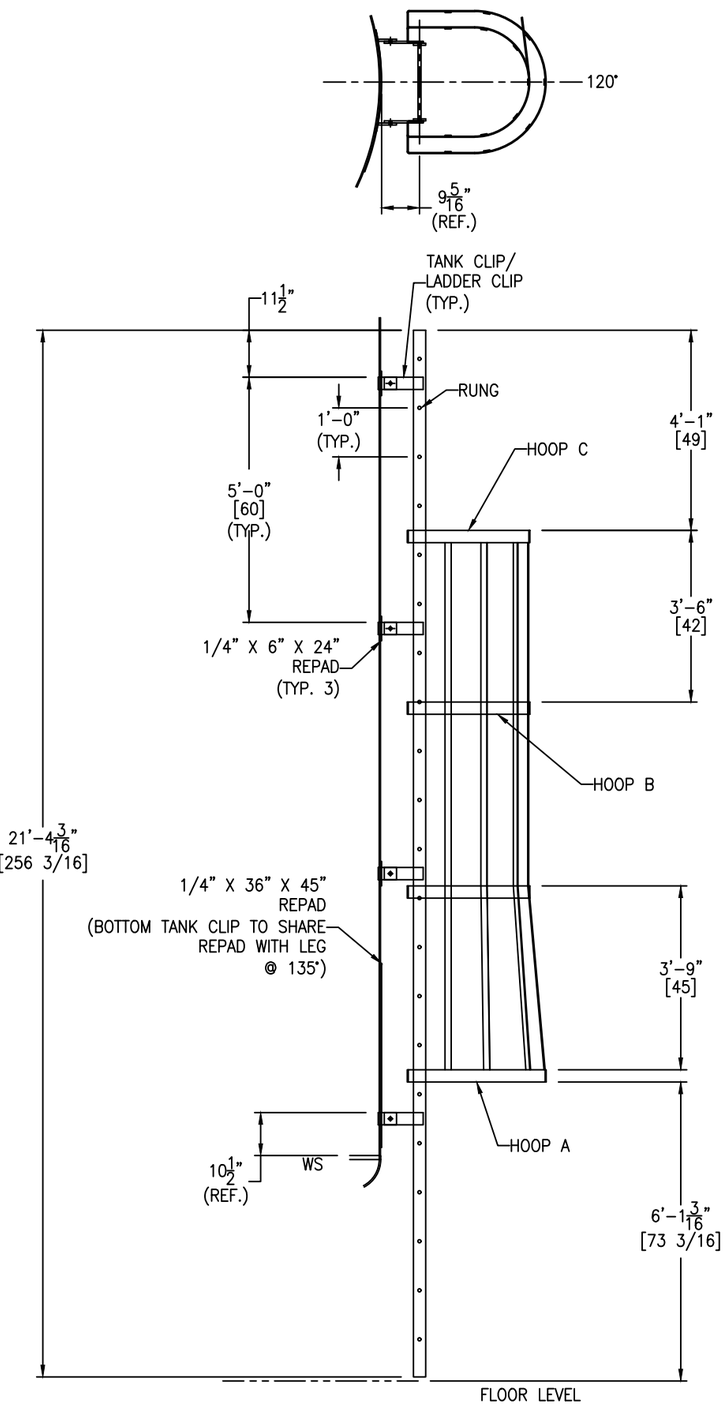

LOWER LADDER DETAIL
SCALE: 1/2" = 1'-0"

GM-73

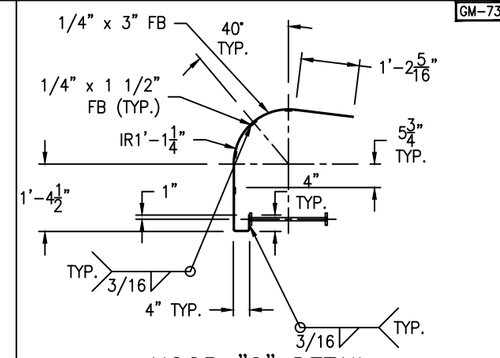

HOOP "C" DETAIL
(1 REQ'D) SCALE: 1/2" = 1'-0"

GM-73

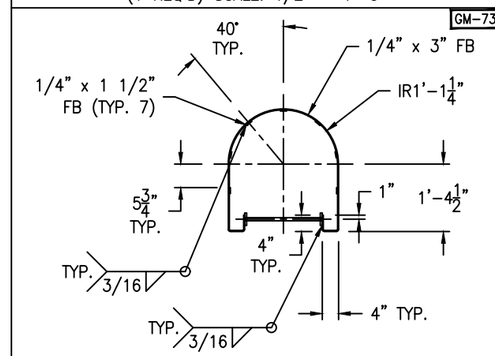

HOOP "B" DETAIL
(2 REQ'D) SCALE: 1/2" = 1'-0"

GM-73

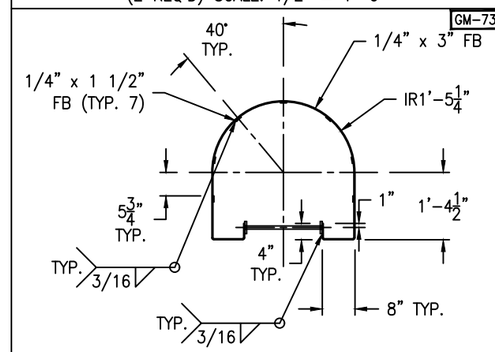

HOOP "A" DETAIL
(1 REQ'D) SCALE: 1/2" = 1'-0"

GM-73

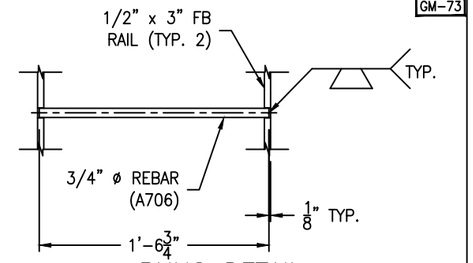

RUNG DETAIL
(21 REQ'D) SCALE: 1 1/2" = 1'-0"

GM-73

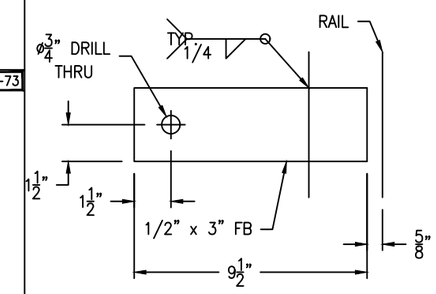

LADDER CLIP DETAIL
(8 REQ'D) SCALE: 3" = 1'-0"

FC-38

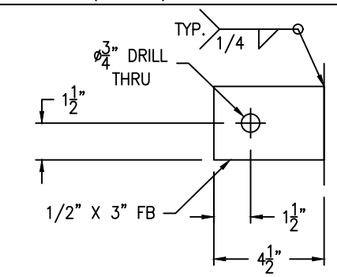

TANK CLIP DETAIL
(8 REQ'D) SCALE: 3" = 1'-0"

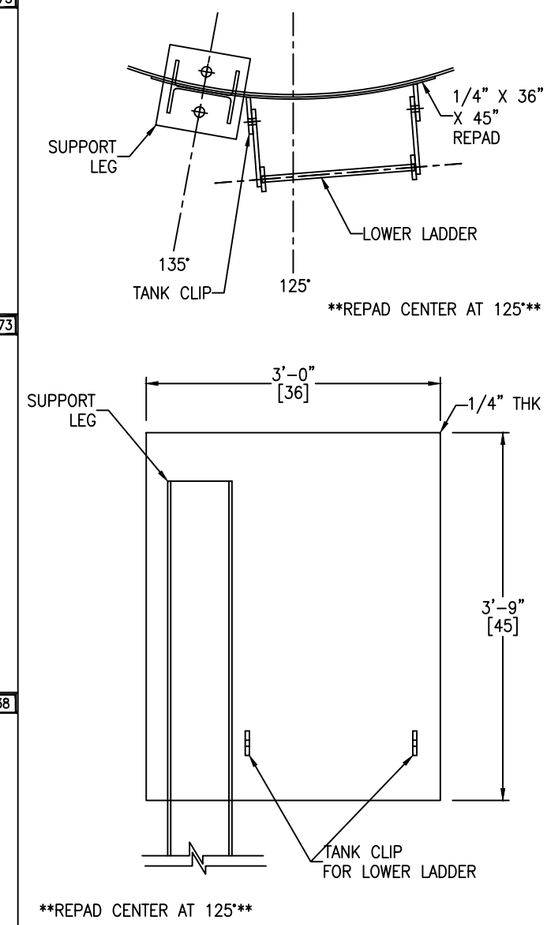

TANK CLIP AND LEG REPAD DETAIL
SCALE: 1" = 1'-0"

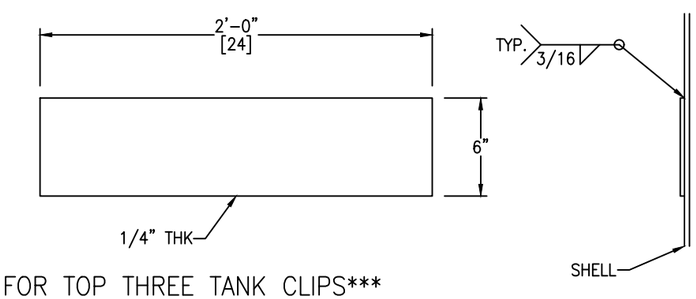

REPAD FOR TOP THREE TANK CLIPS

TANK CLIP REPAD DETAIL
(3 REQ'D) SCALE: 2" = 1'-0"

LADDER TO BE HOT-DIPPED GALVANIZED

REV	D.BY	C.BY	DATE	DESCRIPTION
				AS BUILT
3	RS	NP	7/29/25	CERTIFIED
2	RS	NP	7/18/25	APPROVAL REV 2
1	RS	AD	7/2/25	APPROVAL REV 1
0	AD	RS	5/28/25	APPROVAL

⚠ REVISIONS

Savannah Tank & Equipment Corp.
1517 Telfair Road, Savannah, GA 31415
(912) 233-8902

DRAWN BY: AD
CHK'D BY: RS
APPROVED BY: NP
SCALE: 1/4" = 1'-0"

KRATON CHEMICAL LLC
SKIM OIL TANK
EQUIP. #
CUST. PO #4500337009

DRAWING NO.: 052-25-8 SHT 8 OF 11 REV. SET 3

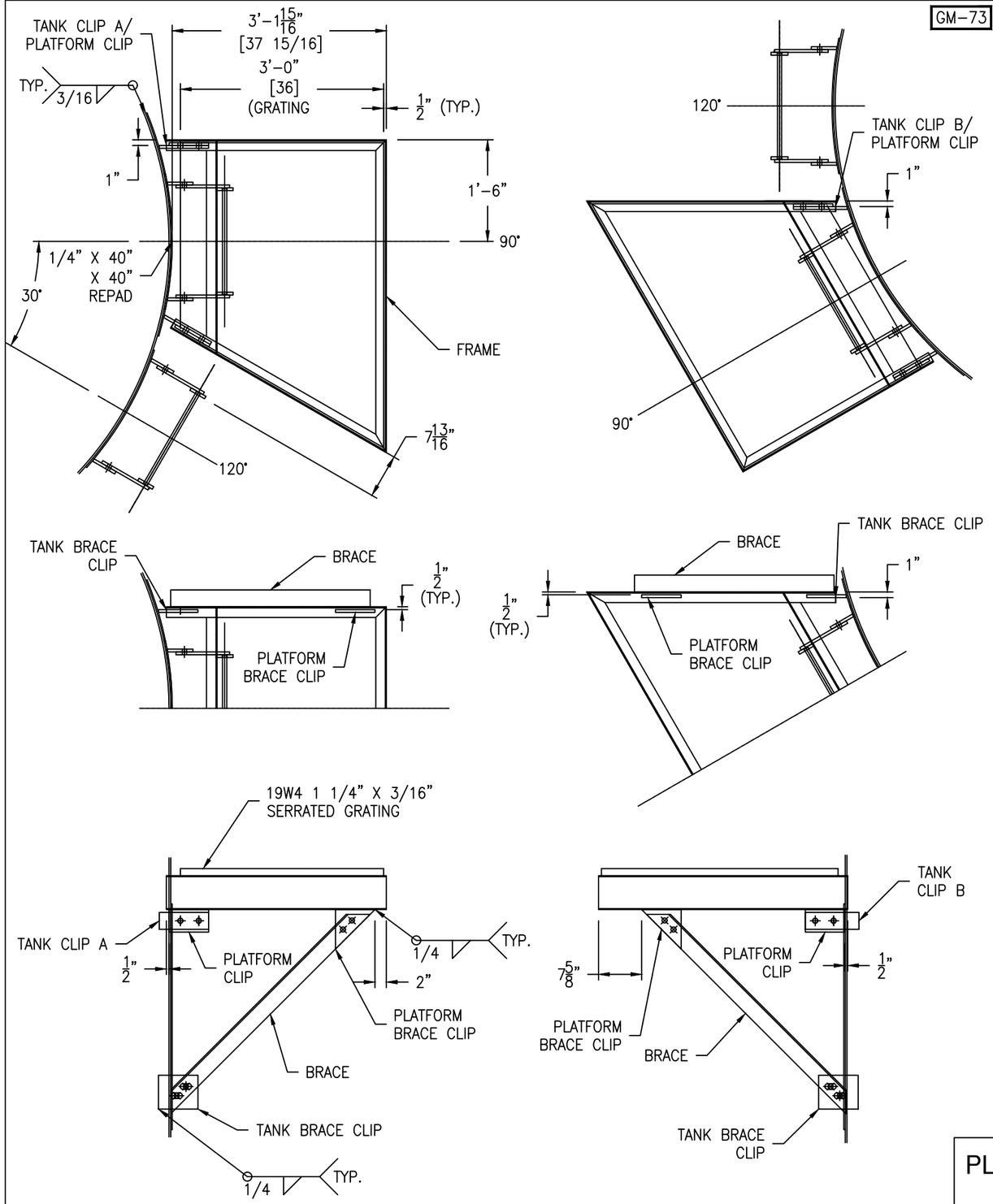

FRAME SUPPORT BOLTING:
(12) 3/4-10 NC X 2" HH BOLT - SA193-B7 (ZINC PLATED)
(12) 3/4-10 NC HH NUT - SA194-2H (ZINC PLATED)

SCALE: 3/4" = 1'-0"

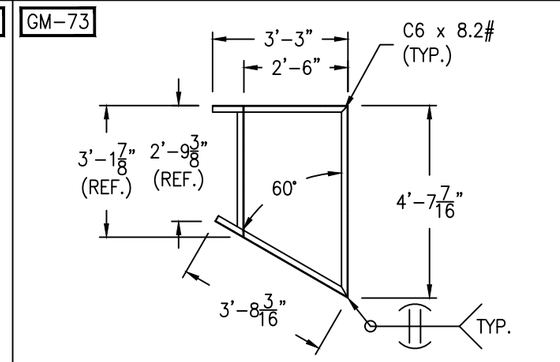

PLATFORM FRAME DETAIL

SCALE: 3/8" = 1'-0"

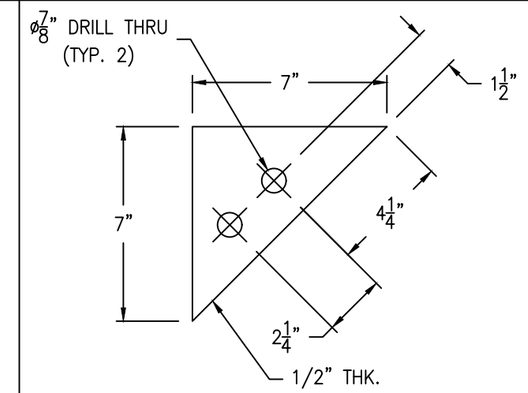

PLATFORM BRACE CLIP DETAIL

(2 REQ'D) SCALE: 3" = 1'-0"

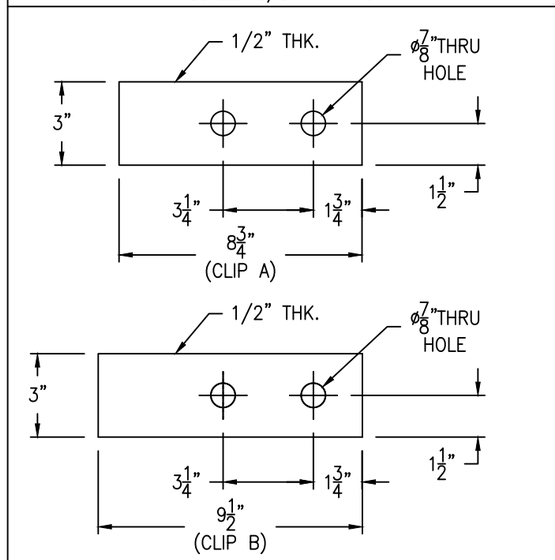

TANK CLIP DETAIL

(2 REQ'D) SCALE: 3" = 1'-0"

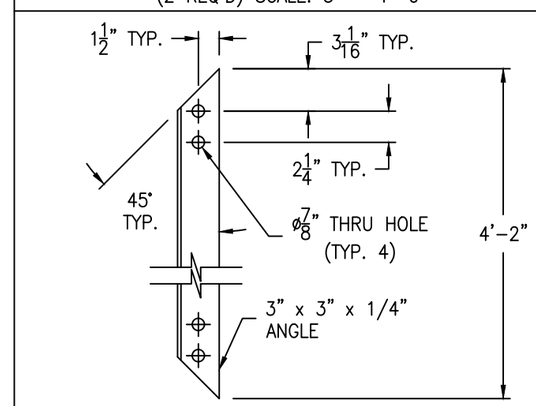

BRACE DETAIL

(2 REQ'D) SCALE: 1 1/2" = 1'-0"

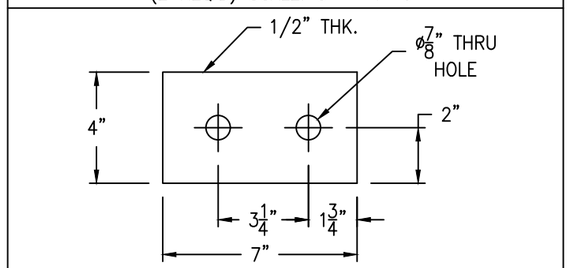

PLATFORM CLIP DETAIL

(2 REQ'D) SCALE: 3" = 1'-0"

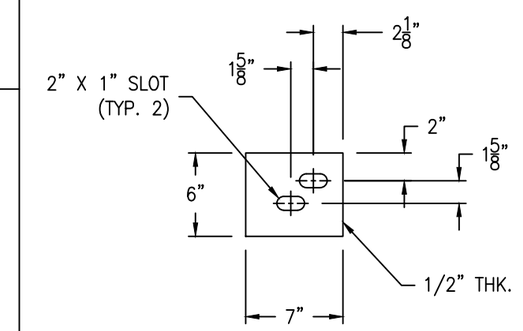

TANK BRACE CLIP DETAIL

(2 REQ'D) SCALE: 1 1/2" = 1'-0"

PLATFORM TO BE HOT-DIPPED GALVANIZED

REV	D.BY	C.BY	DATE	DESCRIPTION
				AS BUILT
3	RS	NP	7/29/25	CERTIFIED
2	RS	NP	7/18/25	APPROVAL REV 2
1	RS	AD	7/2/25	APPROVAL REV 1
0	AD	RS	5/28/25	APPROVAL

1 REVISIONS

Savannah Tank & Equipment Corp.
1517 Telfair Road, Savannah, GA 31415
(912) 233-8902

DRAWN BY: AD
CHK'D BY: RS
APPROVED BY: NP
SCALE: 3/8" = 1'-0"

KRATON CHEMICAL LLC
SKIM OIL TANK
EQUIP. #
CUST. PO #4500337009

DRAWING NO.: 052-25-9 SHT 9 OF 11 REV. SET 3

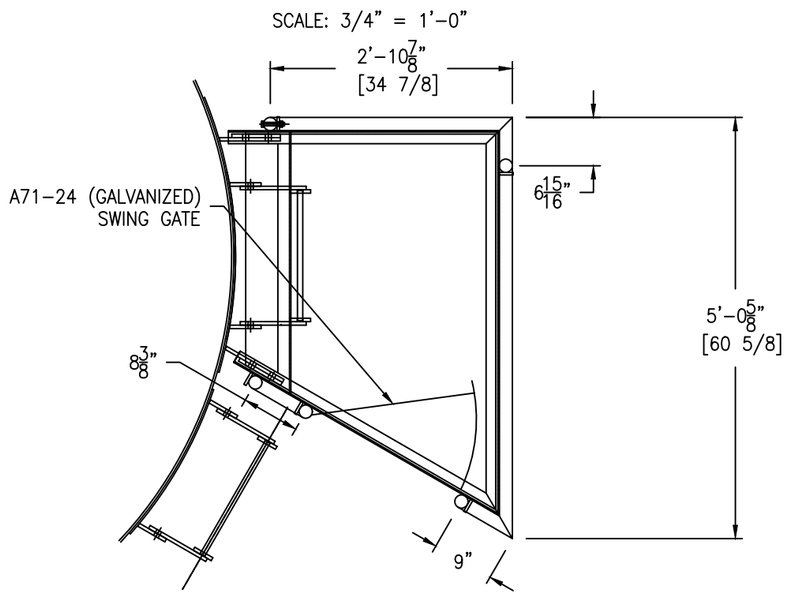

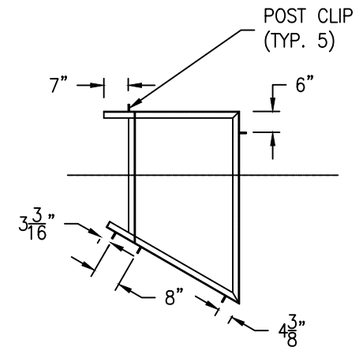

POST CLIP DETAIL

SCALE: 3/8" = 1'-0"

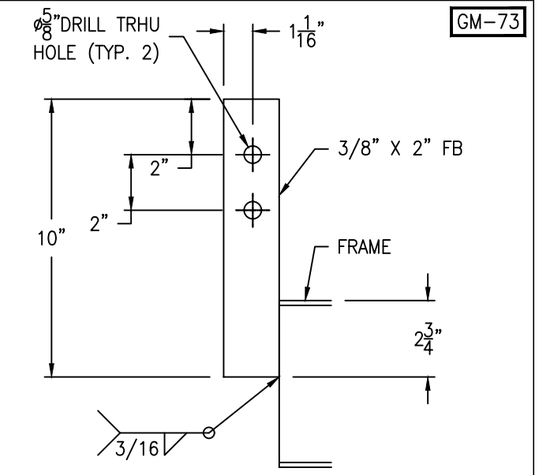

POST CLIP DETAIL

(5 REQ'D) SCALE: 3" = 1'-0"

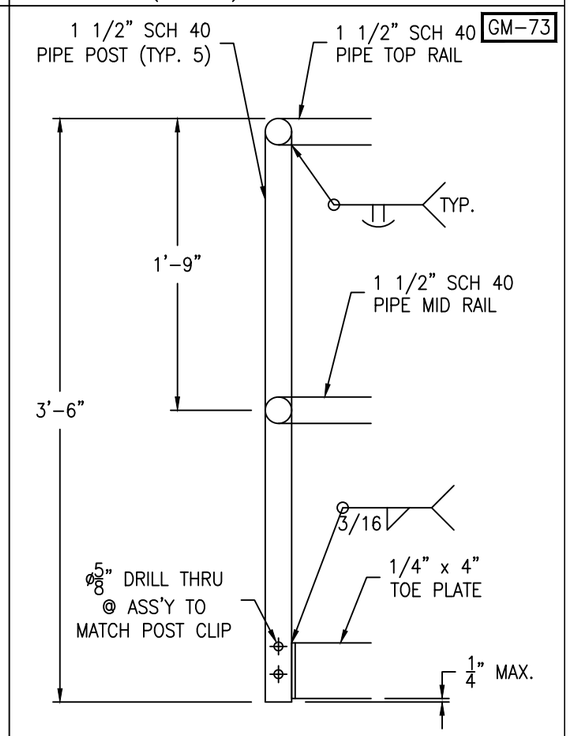

*NOTE: DRILL HOLES IN RAILS AND POSTS IF GALVANIZED.

HANDRAIL DETAIL

SCALE: 1 1/2" = 1'-0"

HANDRAIL BOLTING:
(10) 1/2-13 NC X 3" HH BOLT - SA193-B7 (ZINC PLATED)
(10) 1/2-13 NC HH NUT - SA194-2H (ZINC PLATED)

HANDRAILS TO BE HOT-DIPPED GALVANIZED

REV	D.BY	C.BY	DATE	DESCRIPTION
				AS BUILT
3	RS	NP	7/29/25	CERTIFIED
2	RS	NP	7/18/25	APPROVAL REV 2
1	RS	AD	7/2/25	APPROVAL REV 1
0	AD	RS	5/28/25	APPROVAL

REVISIONS

Savannah Tank & Equipment Corp.
1517 Telfair Road, Savannah, GA 31415
(912) 233-8902

DRAWN BY: AD
CHK'D BY: RS
APPROVED BY: NP
SCALE: 3/8" = 1'-0"

KRATON CHEMICAL LLC
SKIM OIL TANK
EQUIP. #
CUST. PO #4500337009

DRAWING NO.: 052-25-10 SHT 10 OF 11 | REV. SET 3

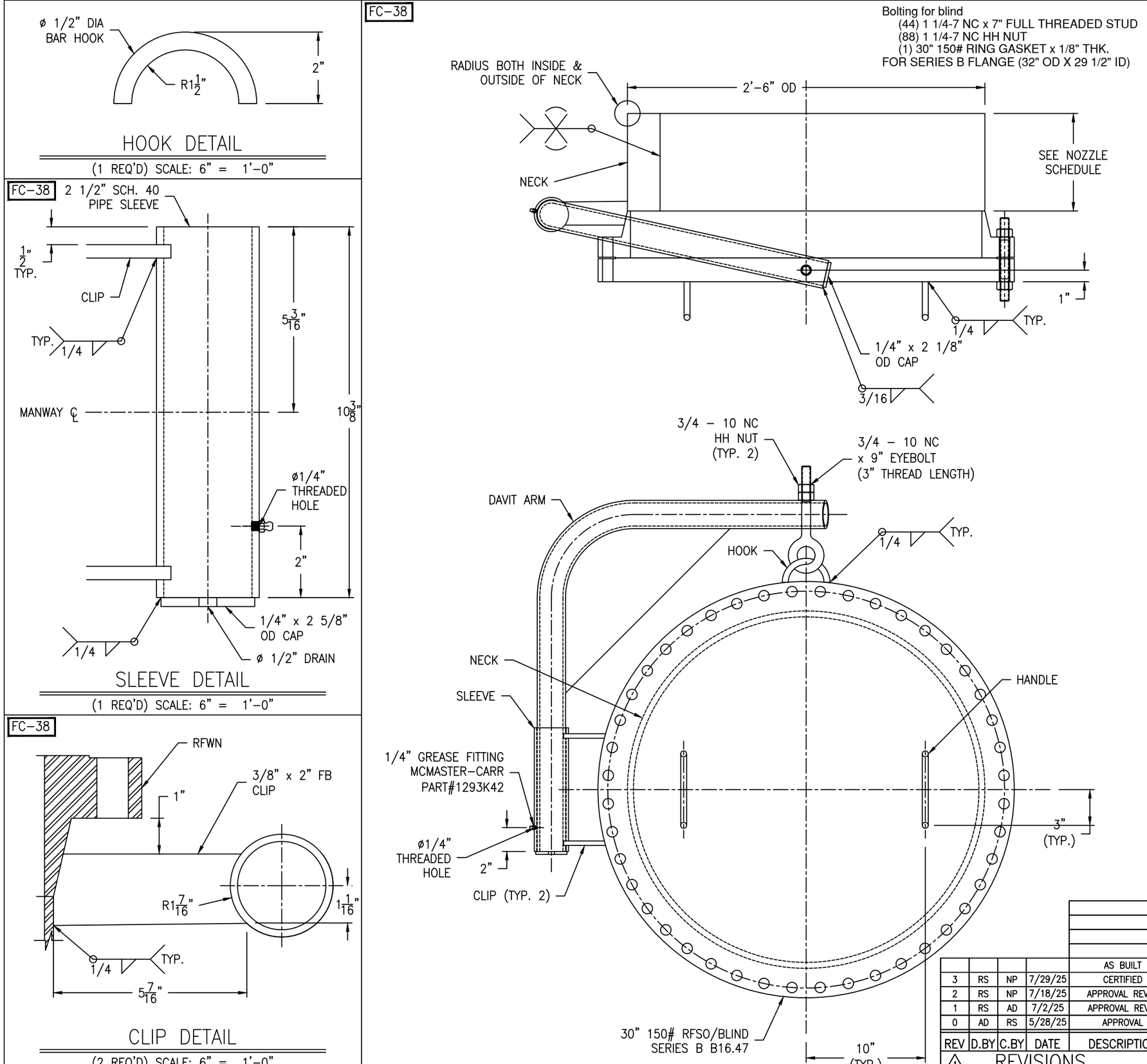

REV	D.BY	C.BY	DATE	DESCRIPTION
				AS BUILT
3	RS	NP	7/29/25	CERTIFIED
2	RS	NP	7/18/25	APPROVAL REV 2
1	RS	AD	7/2/25	APPROVAL REV 1
0	AD	RS	5/28/25	APPROVAL

⚠1 REVISIONS

Savannah Tank & Equipment Corp.
1517 Telfair Road, Savannah, GA 31415
(912) 233-8902

DRAWN BY: AD
CHK'D BY: RS
APPROVED BY: NP
SCALE: 2" = 1'-0"

KRATON CHEMICAL LLC
SKIM OIL TANK
EQUIP. #
CUST. PO #4500337009

DRAWING NO.: 052-25-11 SHT 11 OF 11 | REV. SET 3